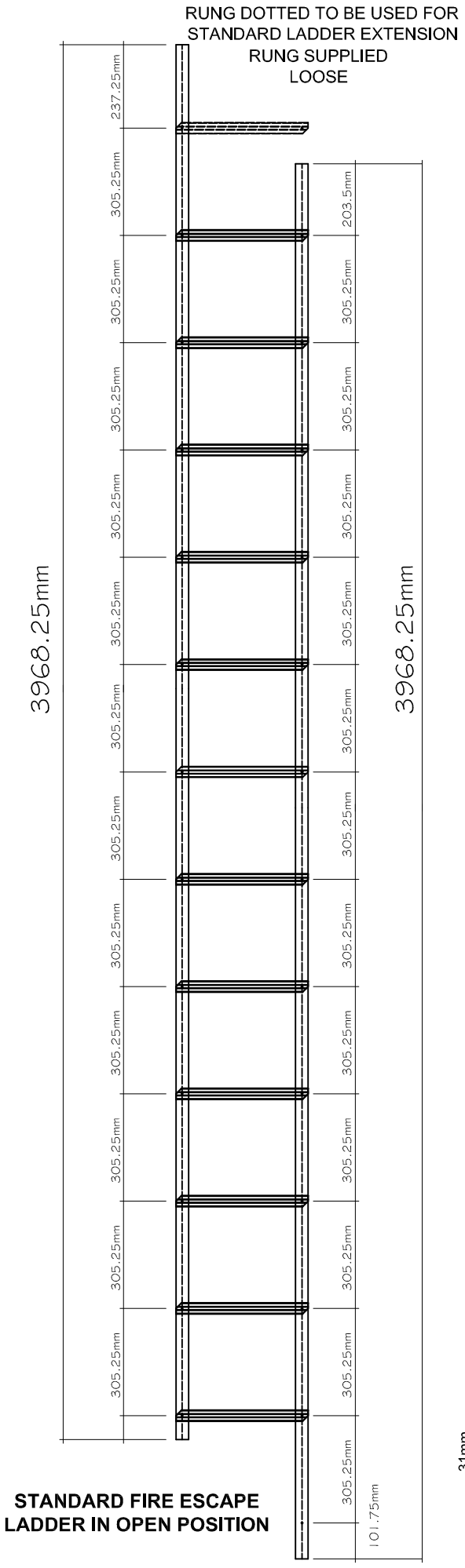

STANDARD FIRE ESCAPE LADDER IN OPEN POSITION

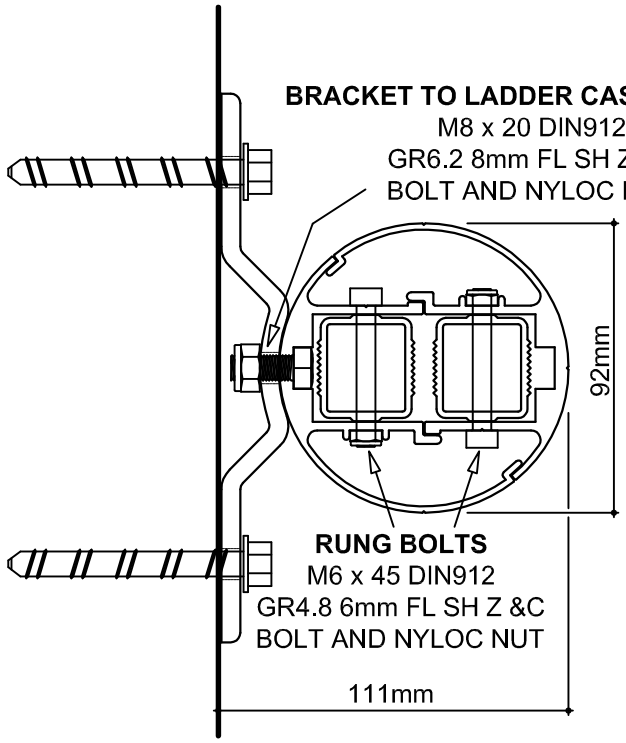

GENERAL FIXING ARRANGEMENT
(SECTIONAL DRAWING)

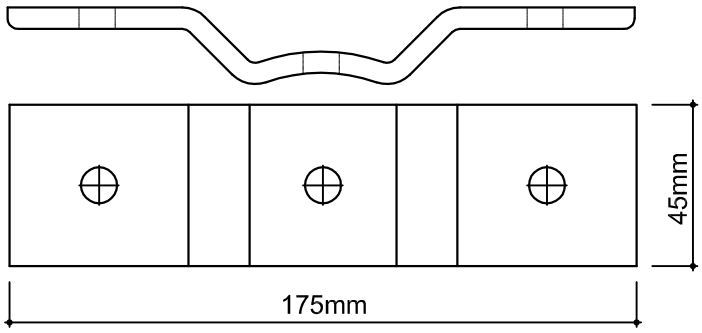

WALL MOUNTING BRACKET
(aluminium extrusion)
ALUMINIUM GRADE 6063

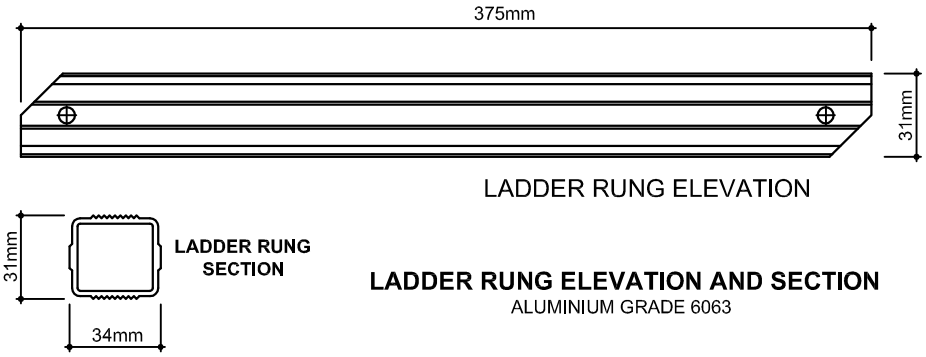

LADDER RUNG ELEVATION AND SECTION
ALUMINIUM GRADE 6063